WINDPRO SLIM



DOUBLE SIDED PAVEMENT SIGNS WITH TOP OPENING SLIDE-IN DESIGN

WindPro Slim is a double-sided stopper as pavement sign. It is suitable for outdoor use. Frame is made of sturdy aluminium. Poster is secured by standing firm between cover and backing. 2xAnti-reflex poster protection and a separator are included. It is suitable for 22"×60 " poster. It is equipped with water fillable heavy base which is made of HDPE. Water capacity is 24lt. Total weight is 60.63 lbs when full with water. It is equipped with wheels for easy carriage. Colour options are silver and black.

KEY SELECTION ATTRIBUTES

* Double-sided, outdoor Pavement Sign with top opening slide-in design, equipped with swinging springs and water base for flexibility and stability.
* Easy to use by sliding posters from top opening profile in between PET covers and PVC foam backing. The poster is firmly secured in between the backing and cover.
* Silver and black colours in standard and various RAL colors available with antimicrobial powder coating.
* Suitable for outdoor use with 22"x60" poster size.
* Standard poster thickness is between 0,0039" – 0,0078" . If used without PVC foam backer, maximum poster thickness is 0.16" for low density rigid posters.
* One set includes top and bottom parts of double sided top opening slide-in aluminium frame with 19 mm depth and swinging springs for stabilizing the frame in outdoor conditions, 2 anti-reflex PET poster covers and 1 PVC foam backing, 28.35"x20.87"x5.98"water fillable HDPE heavy base with wheels for easy carrying and related fixing accessories like frame connectors, sheet plates, bolts, nuts, spanners, and allen key.
* Heavy-duty coil springs resist strong winds and return the sign to an upright position. Water base with 24lt capacity and 60.63 lbs weight when filled with water, provides stability.
* It is recommend to carry the product with carry tool when the base is full with water. Carry tool is optional, not included in the package, please order separately.
* Packed in 2 boxes with an easy-to-understand instruction sheet. No tool assembly. Assembly in 75 seconds.



Silver, Silver



Silver, Black



Black, Black

T: +1 855-478-0652 / info@mtdisplaysllc.com / www.mtdisplaysllc.com

COLOURS IN STOCK

Silver Black

SUITABLE FOR

Windpro Slim can be used for OUTDOOR applications, for signage needs in many locations like shopping centers, markets, groceries, hotels, offices airports, shops and stores, hospitals, schools, apartments and many more.

WATCH VIDEO

Watch video at our website
www.mtdisplaysllc.com

FEATURES



EXPLODED VIEW



TECHNICAL DRAWING

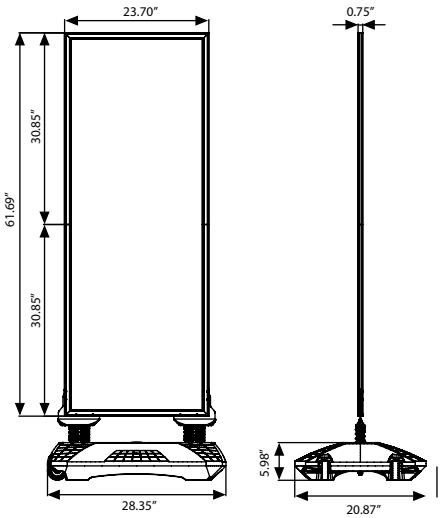

OPTIONAL ACCESSORIES



Optional carry tool.
UYUP480945

ARTICLES

BLACK	SILVER	EXTERNAL (x-y)	POSTER	COPY	WEIGHT WITH PACKING	PACKING SIZE *W X H X D
USWPS10B26	USWPS10N26	23.70" X 61.70"	22" X 60"	20.55" X 58.54"	32.60 lbs	6.29" X 6.29" X 24.8" 25.98" X 42.12" X 1.81" 21.85" X 29.52" X 7"

PHYSICAL DATA

Material
Slide-in aluminium profile frame with 19mm depth, PET anti-reflex poster cover, PVC foam backing, heavy duty coil springs, HDPE water base.

Poster Thickness
Standard poster thickness is between 0.0039" to 0.0078". If used without PVC backer, maximum poster thickness is 0.16" for low density rigid posters. Any non-standard poster thicknesses should be indicated with order.

Surface Finish
Natural silver-anodized, or black powder coated in standard and various RAL colors available with antimicrobial powder coating. Call for custom color requests.

Recycled Content
For frame part up to 78% and for base part up to 40% recycled content used.

Warranty
All products are guaranteed for 2 years by MT Displays with below conditions:
Warranty Conditions

Installation Considerations
Packed in 2 boxes with an easy-to-understand instruction sheet. No tool assembly. Assembly in 75 seconds. One set includes top and bottom parts of double sided top opening slide-in aluminium frame with 0.75" depth and swinging springs for stabilizing the frame in outdoor conditions, 2 anti-reflex PET poster covers and 1 PVC foam backing, 28.35"x20.87"x5.98"water fillable HDPE heavy base with wheels for easy carrying and related fixing accessories like frame connectors, sheet plates, bolts, nuts, spanners, and allen key. It is recommend to carry the product with carry tool when the base is full with water. Carry tool is optional, not included in the package, please order separately.

Design Considerations
Double-sided, outdoor Pavement Sign with top opening slide-in design and swinging springs, equipped with water base for flexibility and stability. Easy to use by sliding posters from top opening profile in between PET covers and PVC backing. The poster is firmly secured in between the backing and cover. Suitable for 21.02"x59.02" 0.87"x2.36" poster size. Heavy-duty coil springs resist strong winds and return the sign to an upright position. Water base with 24lt capacity and 60.63 lbs weight when filled with water, provides stability.

Cleaning and Disinfecting
Clean your displays, with damp microfiber clothes, rinsed with simply water or warm, soapy or gentle shampooed water. Avoid using vinegar, abrasive, acidic, alcohol-based or heavy cleaners or cleaners containing Ammonia. Only after cleaning the product, if needed, simply apply disinfectant or sanitizer that is in compliance with your local guidelines and regulations.

PRINT TEMPLATES

Windpro Slim - 22”x60”
Document Size: 22.4”x 60.39”- (Includes Bleeds)
Finished Size: 22.01”x60” Print

INSTALLATION INSTRUCTIONS

WindPro Slim / 1011990H000

Each product includes
- 1 x Frame top part
- 1 x Frame lower part
- 1 x Base
- 1 x PVC Foam backing
- 2 x Pet cover
- 1 x 2,5 Allen key
- 1 x 17 Spanner
- 4 x Nut
- 2 x Sheet plate
- 2 x Frame connector part
- 8 x Bolt M4X8

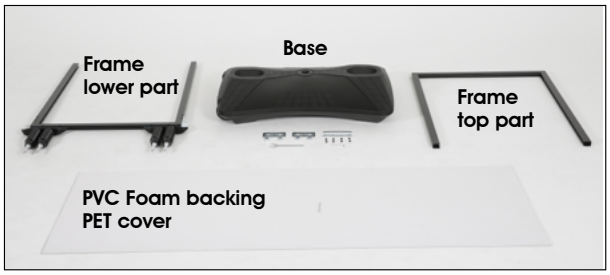

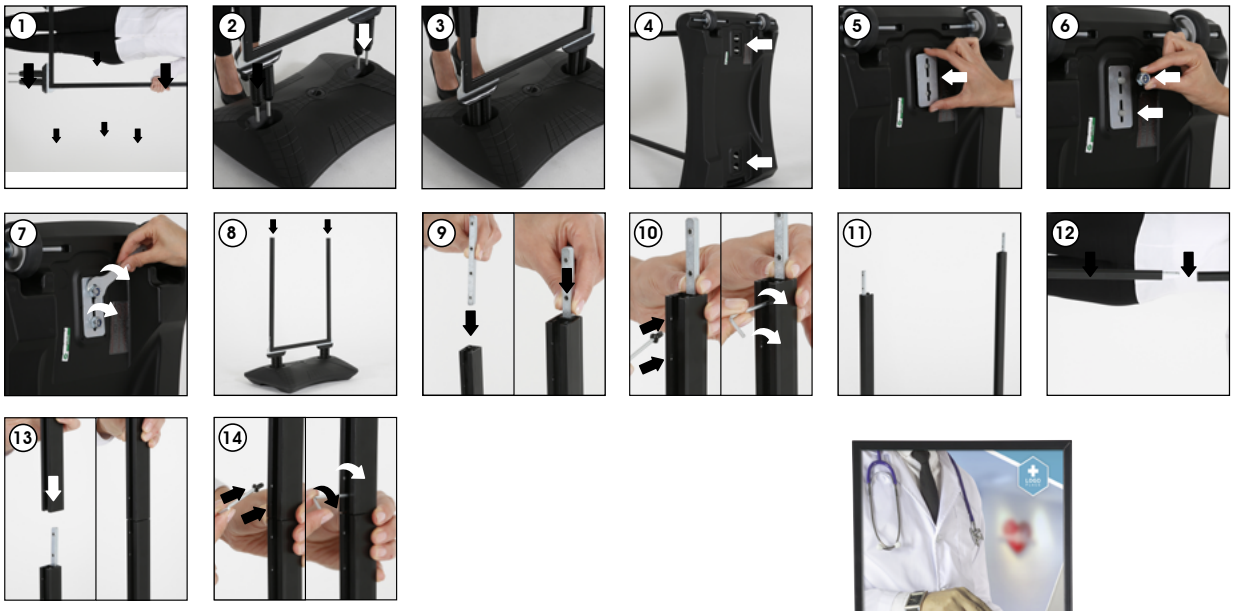

Insert the posters

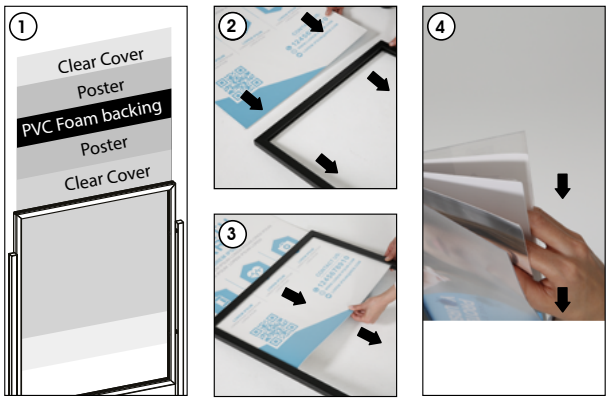



• Please inform the order number on the product or on the carton (e.g. 1/110001394-460) to the place that you have made the purchase if anyproblem with the product occurs.
• All rights reserved. All pictures, figures and writings are secured internationally by copy-right law. Infringements will be sued by civil and legal law.

This technical sheet’s contents are all subject to update and modification at MT Displays’ exclusive discretion. There is nothing official about this document. For final and legally binding information, please get in touch with the sales staff at MT Displays.