M&T Displays Since 1993

ILLUMINATED WINDPRO WITH LED PLUS



LED SIDEWALK SIGN WITH SPRING DESIGN AND RECHARGEABLE BATTERY

WindPro with LED Plus is an illuminated and double-sided stopper as pavement sign. It is battery operated and equipped with locked battery compartment. Battery charger is included. Click clack snap open system provides easy poster change and frame has safe corners. It is structured with clear anti-reflex PET Cover. Springs keeps WindPro with LED Plus in balance. Weatherproof IP56, suitable to use for outdoor conditions. Filling with water capacity is 88 lbs . It has an optional carry tool.

KEY SELECTION ATTRIBUTES

* Patent-protected, double-sided Pavement Sign illuminated with LED technology, equipped with a heavy waterbase and swinging steel spring design for flexibility and stability.
* Energy saving and bright modes are applied with a switch.
* Life P04 battery which provides high power on low weight is stored in a lockable compartment in the base. Battery is shipped at full charge capacity, see digital LED indication on battery to recharge. It can not be charged in the product.
* Weatherproof IP56: Suitable for rainy conditions with over size anti-reflex PET and a rubber seal around the frame for protecting the poster within.
* One set includes a double sided snap open swing master frame with safe corners and cover hangers, 2 anti-reflex poster covers, 1 PP backing, heavy waterbase with battery compartment and wheels, one battery, one battery charger, one RF receiver, 2 remote control, one key, 2 washers, 4 nuts, one spanner, one drum cap wrench for installation.
* Optional cable lock kit and carry tool are available.
* The wheels ensure the movement of the unit.
* Black and natural silver-anodized in standard and various RAL colors available with antimicrobial powder coating. Standard color for waterbase is black while other colors are available upon request.
* Packed unassembled with an easy mounting instruction sheet & fixing set. 2 packs. See info chart for pack sizes. Assembly in 60 seconds.



T: +1 855-478-0652 / info@mtdisplaysllc.com / www.mtdisplaysllc.com

COLOURS IN STOCK

Silver Black

SUITABLE FOR

Illuminated WindPro with LED Plus can be used for INDOOR and OUTDOOR applications, for signage needs in many locations like shopping centers, markets, groceries, hotels, offices airports, shops and stores, hospitals, schools, apartments and many more.

WATCH VIDEO

Watch video at our website www.mtdisplaysllc.com

FEATURES



EXPLODED VIEW







Cable lock kit for WindPro 82.67". TZZZ998701

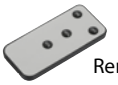

Remote Control



1011199C000 - LIFEPO4 25.6V 7.5A Rechargeable battery 25,6V 7,5A LiFePO4 model battery

1011200C000 - LIFEPO4 29.2V 1.35A Battery charger for LiFePO4 29,2V 1,35A

TECHNICAL DRAWING

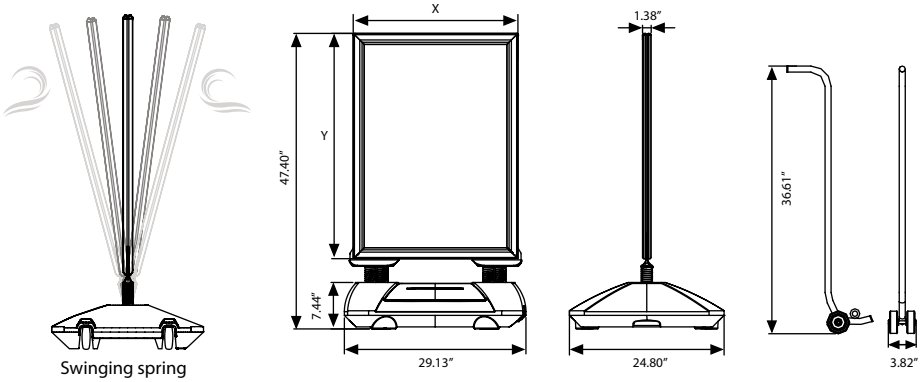

In case of any claim, user is required to return product or any parts to manufacture for analyses at their cost. As long as the manufacturer confirms the problem is a manufacturing fault, the replacement can be provided. This applies for all illuminated products.

ARTICLES

ARTICLE	DESCRIPTION	EXTERNAL (x-y)	POSTER	COPY	WEIGHT WITH PACKING	PACKING SIZE *W X H X D
USWLP00BA1	BLACK	26.41"X36.14"	23.38"X 33.11"	22.91"X 32.63"	63.934 lbs	28.70"X 49.21"X 1.77" / 26.77"X 30.70"X 7.87"
USWLP00NA1	GRAY	26.41"X36.14"	23.38"X 33.11"	22.91"X 32.63"	63.934 lbs	28.70"X 49.21"X 1.77" / 26.77"X 30.70"X 7.87"

PRINT TEMPLATES

Illuminated Windpro with LED - 23.39" X 33.11"
Document Size: 23.78"x33.5" (Includes Bleeds)
Finished Size: 23.39" x 33.11"

PHYSICAL DATA

Material
1.37" aluminium profile snap open swing master frame, PET anti-reflex poster cover, PP backing, LDPE Resin waterbase, produced in rotation molding line.

Poster Material & Thickness
0.0098" for standard product.Any non-standard duratrans thicknesses should be indicated with order.

Surface Finish
Black or natural silver-anodized in standard and various RAL colors available with antimicrobial powder coating. Call for custom color requests. Standard color for waterbase is black while other colors are available upon request.

Recycled Content
For frame part up to 78% and for base part up to 40% recycled content used.

Warranty
All products are guaranteed for 2 years by MT Displays with below conditions:
Warranty Conditions

Installation Considerations
One set includes a double sided snap open swing master frame with safe corners and cover hangers, 2 anti-reflex poster covers, 1 PP backing, heavy waterbase with battery compartment and wheels, one battery, one battery charger, one RF receiver, 2 remote control, one key, 2 washers, 4 nuts, one spanner, one drum cap wrench for installation. Optional cable lock kit and carry tool are available.

Storage Conditions
Goods should be stored at 32F° to 77°F in a dry place. Store in the original package.

Cleaning and Disinfecting
Clean your displays, with damp microfiber clothes, rinsed with simply water or warm, soapy or gentle shampooed water. Avoid using vinegar, abrasive, acidic, alcohol-based or heavy cleaners or cleaners containing Ammonia. Only after cleaning the product, if needed, simply apply disinfectant or sanitizer that is in compliance with your local guidelines and regulations.

Design Considerations
Patent-protected, double-sided Pavement Sign illuminated with LED technology, equipped with a heavy waterbase and swinging steel spring design for flexibility and stability. Energy saving and bright modes are applied with a switch. Life P04 battery which provides high power on low weight is stored in a lockable compartment in the base. Battery is shipped at full charge capacity, see digital LED indication on battery to recharge. It can not be charged in the product. Suitable for logo printing on waterbase, max. height is 0.15".Weatherproof IP56: Suitable for rainy conditions with over size anti-reflex PET and a rubber seal around the frame for protecting the poster within. The wheels ensure the movement of the unit.

Hazardous Substances
M&T Displays prioritizes compliance with the REACH (Registration, Evaluation, Authorisation and Restriction of Chemicals) and RoHS (Restriction of Hazardous Substances) directives to protect both the environment and human health. We ensure that our products do not contain substances listed under REACH and adhere to strict RoHS limits for hazardous materials. Our manufacturing process ensures that lead, mercury, cadmium, and other restricted substances remain within the permitted thresholds, guaranteeing safe and sustainable products for our customers.

Patent
OHIM DM/098 297

ILLUMINATED PRODUCTS TECHNICAL MANUAL

WARNING

Do not charge the batte ry in the lockable compartment of the base.
Batte ry will be shipped at full charge capacity see digital indication on the battery to recharge.
Batte ry should be stored fully charged
If not in us e, every 3 months battery should be recharged.
Do not keep the base in water more than 10cm as it may let the water in battery compartment.

BATTERY & BATTERY CHARGER



UYPSWL0010
Spare battery

29.2 V DC
Complete with charger
1 year guaranteed



Delivered with 78.74 long cable and EU plug.
UK, US or CH plugs should be specified with order.



CARRY TOOL

WindPro tool / UYUP480945
Optional accessory. Pulling force 13.228 lbs-17.637lbs max.

TECHNICAL SPECIFICATION

ARTICLE	POSTER	ILLUMINATION		POWER CONSUMPTION	
		Energy Saving	Bright Mod	Energy Saving	Bright Mod
USWLP00NA1	23.38 X 33.11	1000 LUX	2000 LUX	15 W	30 W

PRODUCT FEATURES

Patented product
Outdoor us e, IP certified
Adjustable brightness:
- ✓ Bright Mode: approx. 9 hours (2000-2200 Lux)
- ✓ Energy Saving Mode: approx.18 hours (1000-1100 Lux)

*This information is based on average temperature of 23 C.
Complete with accessories: batte ry, charger.
Chrome coated zamak corners provide mitred look and yet soft finish corners
UV resistant covers
12 locks keeps the poster safe.

LED FEATURES (Duris S5)

Viewing angle at 50 % IV: 120
Color: 2700 K - 6500 K (white)
CRI: Min. 80 (typ. 82)
Luminous Flux: Typ. 28 lm @ 3000 K
Luminous efficacy: Typ. 149 lm/W @ 3000 K
Lumen Maintenance: Testing according to IESNA LM-80 in progress
Life Time : 50.000 Hours
Colour: 5700 K -6500 K (White)*
*For special inquired colour is available in 2700 K -6500 K

OSRAM



ASSEMBLY SHEET / MANUAL

See for the details in manual

INSTALLATION INSTRUCTIONS

Windpro with LED Plus

Each product includes
- 1 x Frame
- 1 x Water Base
- 1 x Battery
- 1 x RF Receiver
- 2 x Remote control
- 2 x Washer
- 4 x Nut M10
- 1 x 19 Spanner
- 1 x Drum cap wrench
- 1 x Key





System off 0

Dimmer Mode 1: Remote control will be activate. The frame works with %50 or %100 bright.

Direct Mode 2: The battery connect directly to illumination. The frame works with %100 bright.

One button can shows four specifications



Capacity of Battery (0 - 100 %)

Instant consumption (0 - 2) Ampere

Capacity of battery (0 - 8) Ampere/hour

Battery voltage (20 - 26,6) Volt

- Please inform the order number on the product or on the carton (e.g. 1/110001394-460) to the place that you have made the purchase if anyproblem with the product occurs.
- All rights reserved. All pictures, figures and writings are secured internationally by copy-right law. Infringements will be sued by civil and legal law.

This technical sheet's contents are all subject to update and modification at MT Displays' exclusive discretion. There is nothing official about this document. For final and legally binding information, please get in touch with the sales staff at MT Displays.

T: +1 855-478-0652 / info@mtdisplaysllc.com / www.mtdisplaysllc.com

Issue: 01 - 11/2024